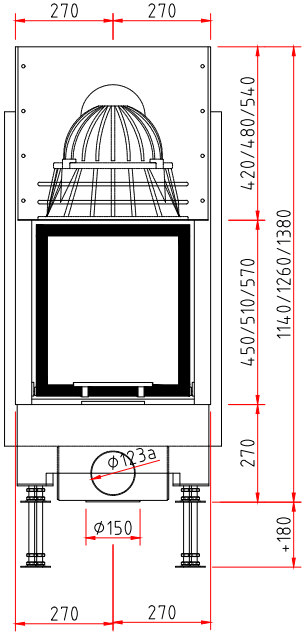
270
270
420/480/540
450/510/570
1140/1260/1380
270
+180
ϕ123a
ϕ150
270
270

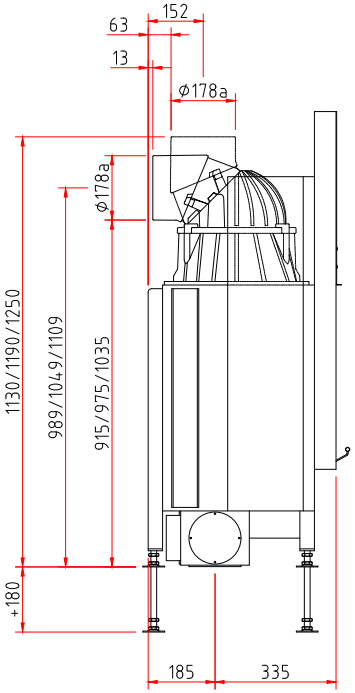
63
152
13
ϕ178a
ϕ178a
1130/1190/1250
989/1049/1109
915/975/1035
+180
185
335