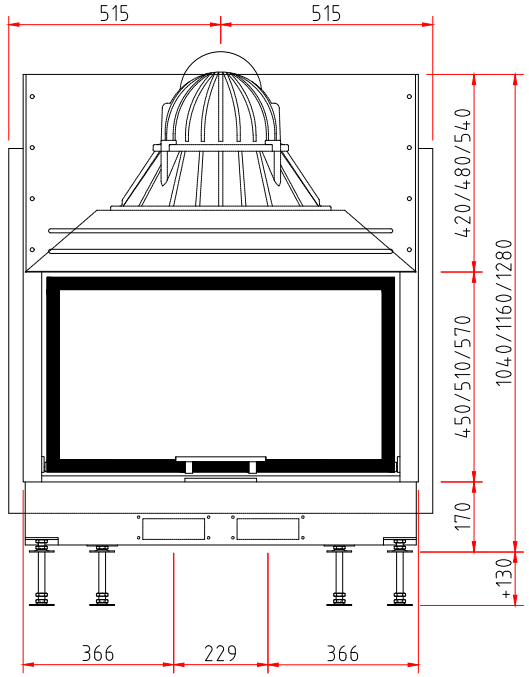
515
515
420/480/540
450/510/570
1040/1160/1280
170
+130
366
229
366

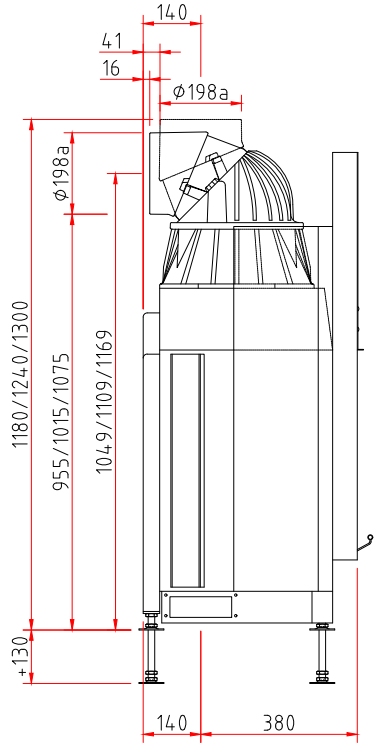
140
41
16
Ø198a
Ø198a
1180/1240/1300
955/1015/1075
1049/1109/1169
+130
140
380